乐清市三丰传动有限公司
YUEQING SANFENG TRANSMISSION CO., LTD.
乐清市三丰传动件厂
YUEQING SANFENG TRANSMISSION PART FACTORY

地址：浙江乐清市兴湖路106号
Add: No.106 xinghu Rd, yueqing city, Zhejiang China
电话(Tel)：0577-62071900
传真(Fax)：0577-62071800 62072727
http://www.sanfengcn.com
E-mail: sanfengcd@163.com sfcdxsb@163.com
QQ: 2729045703

本样本所示图文版权归乐清市三丰传动有限公司所有。
本公司产品不断更新升级中，最终产品可能与样本有所不同，如有疑问，乐清三丰传动 随时为您解答。
The copyright of the pictures and documents shown in this sample belongs to YUEQING SANFENG TRANSMISSION CO., LTD.
The products of this Company are continuously updating and upgrading. The final products may be different with the sample. If you have any doubt, **YUEQING SANFENG TRANSMISSION** will answer you at any time.

三豐傳動®
ISO9001:2015 质量体系认证

十字轴式万向联轴器
CROSS-SHAFT UNIVERSAL COUPLING

球铰式卷筒联轴器
SPHERICAL JOINT TYPE DRUM COUPLING

鼓型齿式联轴器
GROWN GEAR COUPLING

(起重年度B版)
Crane Annual Version B

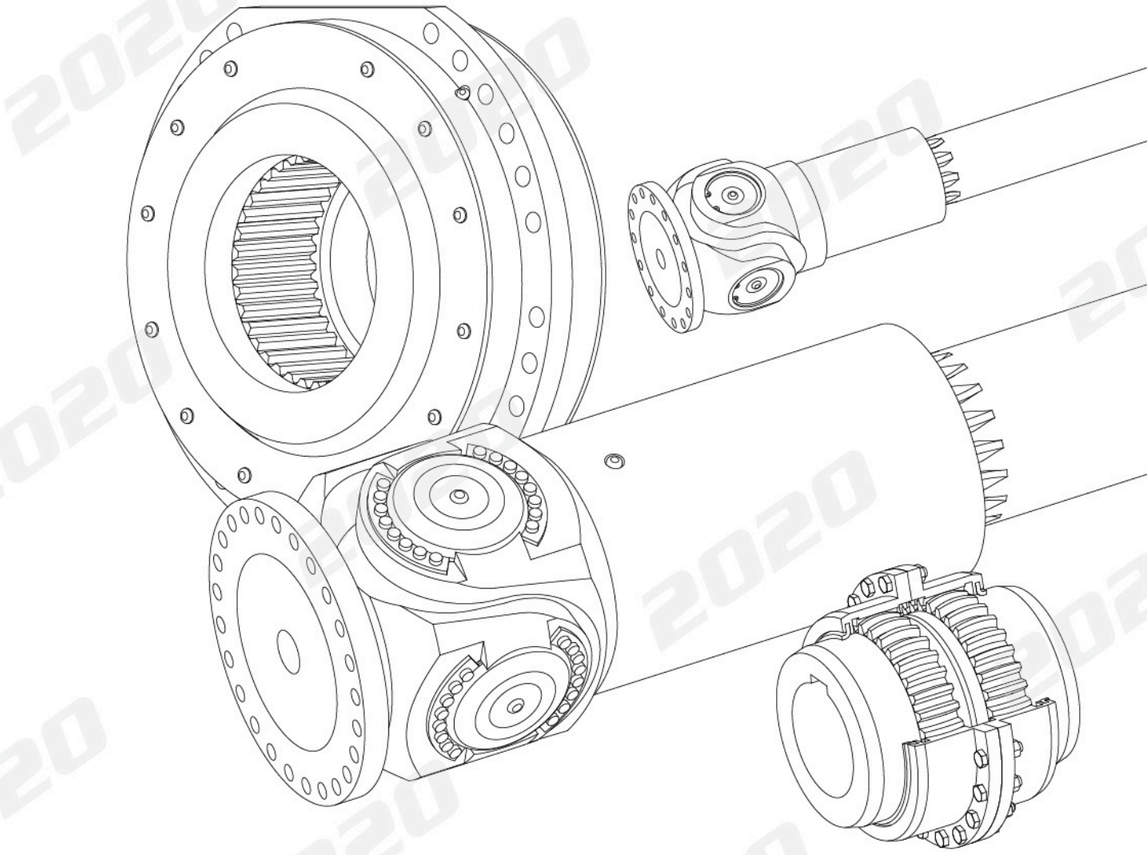

乐清市三丰传动有限公司
YUEQING SANFENG TRANSMISSION CO.,LTD.
乐清市三丰传动件厂
YUEQING SANFENG TRANSMISSION PART FACTORY

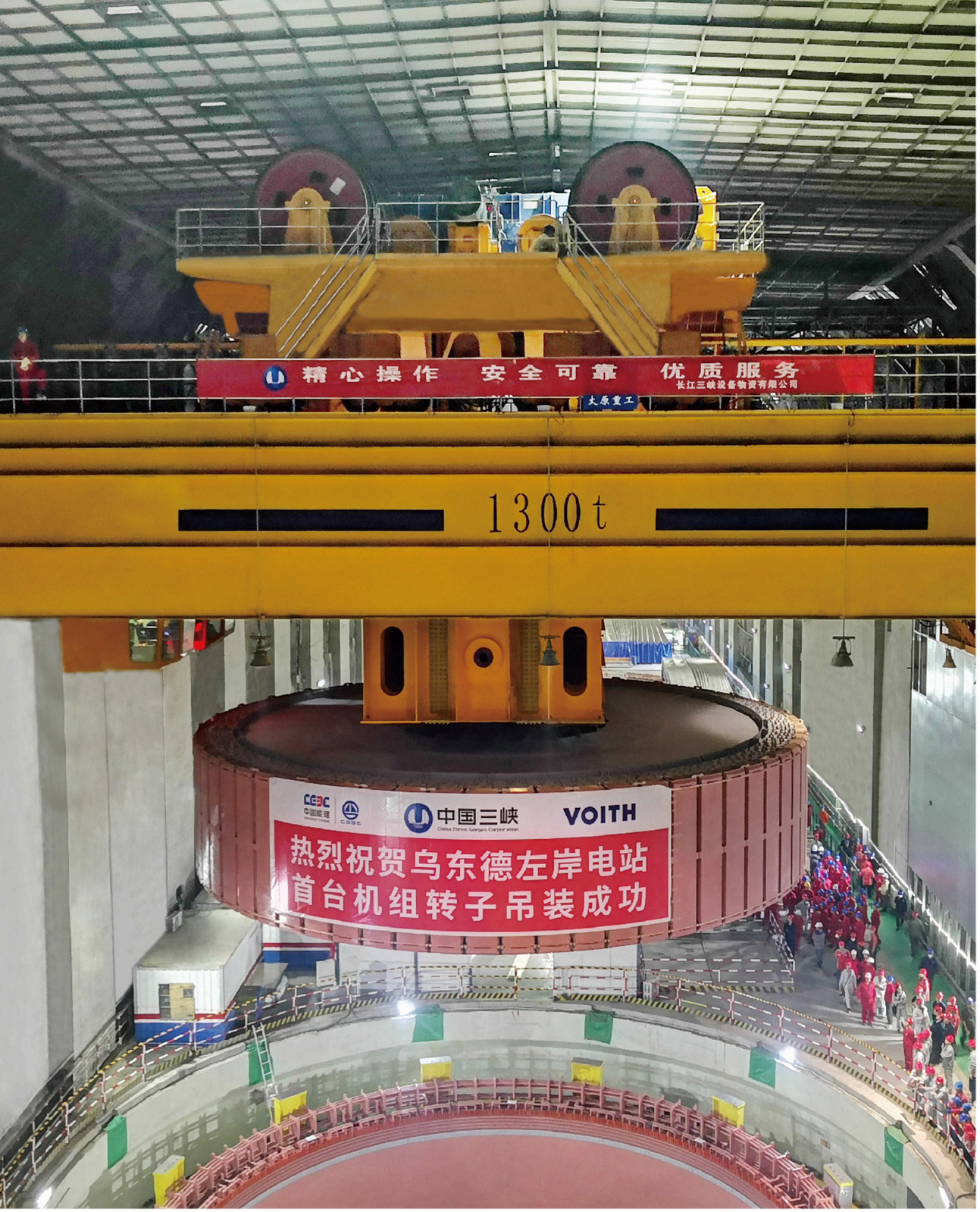

中国各领域大批规格最大、技术含量最高的起重机均由**乐清三丰传动**提供WZL系列球铰式卷筒联轴器和SWF系列十字轴式万向联轴器。

YUEQING SANFENG TRANSMISSION provide WZL Spherical Joint Type Drum Coupling and SWF cross–shaft universal coupling for a large batch of cranes with the maximum specifications and the maximum technical content in various fields in China.

三豐傳動®

ISO9001:2015 质量体系认证

乐清市三丰传动有限公司简介

BRIEF INTRODUCTION TO YUEQING SANFENG TRANSMISSION CO., LTD.

创建于上世纪八十年代中后期的乐清三丰传动，1994年开发生产SWF系列十字轴式万向联轴器和1997年开发生产WZL系列球铰式卷筒联轴器，2013年高起点优化结构设计生产全系列鼓形齿式联轴器。企业拥有一批高素质专业团队从事以上联轴器的开发、生产、销售工作，不断获得多项自主知识产权，坚持品质第一的理念，始终不懈对技术、工艺、材料改进升级。企业早已通过ISO9001质量管理体系认证，目前在人均产值及亩产值指标上均排在全国同行最前列。

乐清三丰传动长期与全国多家重点起重机制造厂家及用户建立稳定的合作关系，中国大批规格最大、技术含量最高的起重机均由乐清三丰传动提供SWF系列十字轴式万向联轴器和WZL系列球铰式卷筒联轴器。目前乐清三丰传动提供的SWF系列十字轴式万向联轴器和WZL系列球铰式卷筒联轴器在国际同类产品中综合性能达到最佳，市场占有率最高。

在取得一定成就的同时，我们更多谋划企业未来发展，不以低端同质化竞争求发展，不以盲目扩大规模求发展，继续朝高品质、高性价比的方向奋力发展。昨天的成就得益于您的真诚合作，在此深表谢意，希望有机会为您提供更优质的服务体验，期待您来乐清三丰传动作技术、商务深入交流。

诚信务实，是我们生存的基石；

卓越品质，是我们获得市场的基本保证；

开拓创新，是我们不断发展的动力。

时常有不法商贩抄袭仿冒乐清三丰传动的技术及产品，所造成后果非常严重，敬请您认真甄别。





YUEQING SANFENG TRANSMISSION CO., LTD. was established in the middle and later periods of 1980s. It developed and produced SWF series Universal Coupling with Cross Shaft in 1994 developed and produced WZL series Drum Coupling with Spherical Hingein 1997, and produced full series Coupling with Drum Gear with optimized structural design based on a high starting point in 2013. It possesses a number of high–quality professional teams which are engaged in the development, production and sales of aforesaid couplings. It continuously wins multiple independent intellectual property rights, insists in the idea of quality first and persists in making improvement and upgrading in technology, processes and materials. It has passed ISO–9001 quality management system certification for a long time and it ranks in the forefront of nationwide peers in the country in per capita output value and output value indexper mu.

YUEQING SANFENG TRANSMISSION CO., LTD. has established steady cooperation relationships with nationwide multiple key crane manufacturers and users. YUEQING SANFENG TRANSMISSION CO., LTD. offers SWF series Universal Coupling with Cross Shaft and WZL series Drum Coupling with Spherical Hinge for a lot of domestic cranes with biggest specification and highest technical contents. At present, SWF series Universal Coupling with Cross Shaft and WZL series Drum Coupling with Spherical Hinge offered by YUEQING SANFENG TRANSMISSION CO., LTD. are the best among international similar products in overall performance.

We have acquired certain achievements, and meanwhile we are focusing more on the future development of the enterprise. We neither seek for development through low–end homogeneous competition, nor strive for development by blindly expanding the scale, but we continue to develop toward the direction of high quality and higher cost performance. Previous achievements benefit from your sincere cooperation. Here we express deep appreciations to you and we hope that we have opportunities to offer better service experience to you. Expect you to come to YUEQING SANFENG TRANSMISSION CO., LTD. to make in–depth technical and business communications.

Honesty and pragmatist are the foundation for our existence;

Excellent quality is the basic guarantee for us to acquire the market;

Exploration and innovation are our motivations of continuous development.

There are frequently illegal traders plagiarizing the technologies and products of YUEQING SANFENG TRANSMISSION CO., LTD., and the consequences generated will be very serious. Please distinguish them carefully.

十字轴式万向联轴器
CROSS-SHAFT UNIVERSAL COUPLING



十字轴式万向联轴器概述
Overview of Cross Shaft Universal Coupling

十字轴式万向联轴器主要由十字轴总成、各种叉头、花键副等零部件组成。具有传递转矩大、可用夹角大、使用寿命长、使用范围广，且灵活平稳高效运转等优点。

SWP、SWC系列：此两系列产品叉头内宝贵的空间尺寸未能充分发挥利用，各项指标及性价比均无明显优势。更多SWP、SWC系列产品内容请登陆乐清三丰传动网站查阅。

JXC系列：整体叉头结构，基本结构类似SWC系列产品，但没有副轴承，该系列属轻载小规格产品，弹性挡圈受力较小，故使用中还是比较可靠。优点是可用夹角更大，造价相对低廉，但传递转矩较小。

SWF系列：乐清三丰传动开发的经典结构系列，拥有多项自主知识产权，能完全替代SWP及SWC系列的高性价比优质产品。属整体叉头结构，充分利用叉头内宝贵的空间尺寸，用独创可靠且装拆方便的卡板替代开槽嵌挡圈结构，并巧妙地在十字轴端部装有轴向滚动轴承，实现径向、轴向全滚动轴承结构。该系列产品承载转矩大、使用寿命长、精度高、转动灵活可靠，特别适用于各繁重工况条件，其优势更加突出。

Cross Shaft Universal Coupling is mainly composed of the cross assembly, various forks, spline pairs and other components and parts. It has big transmission torque, big available included angle, long service life, wide application scope, flexible, steady and efficient operation and other advantages.



SWP and SWC Series: The precious space size within the forks of these two series productsis not fully utilized and there is no obvious advantage in various indexes and the cost performance. For more details about SWP and SWC series products, please log into the website of YUEQING SANFENG TRANSMIS–SION CO., LTD. for consulting.

JXC Series: It is of overall fork structure and its basic structure is similar to SWC series products. Howev–er, it has no auxiliary bearing. Such series belong to products with light load, small specification and relatively small stress on elastic retaining ring. Thus it is comparatively reliable during use. The advantages are that the applied included angle is relatively big, the cost is relatively low but the transmision torque is relatively small.

SWF Series: It is the series with classic structures developed by YUEQING SANFENG TRANSMISSION CO., LTD. It possesses multiple independent intellectual property rights, It can completely replace the high–quality products with high cost perfor–mance of SWP and SWC series. and it is of overall fork structure. It makes full use of the precious space size within the fork, uses the unique pallet which is convenient in assembly and disassembly and reliable to replace the structure of slotted retaining ring. In addition, it skillfully equips axial rolling bearing at the end of the cross shaft to realize full rolling bearing structure at radial and axial directions. Such series products have big load torque, long service life, high accuracy and flexible and reliable rotation. It is especially suitable for various tough operating conditions, where its advantages are more oustanding.

十字轴式万向联轴器选型

根据不同工况需求，选择结构合适、可靠，性价比高的系列产品。根据您提供的技术参数及工况，乐清三丰传动可为您推荐最佳传动技术整体解决方案。

运行机构联轴器型号规格选择

公式A（以工作机参数计算选型）：

$T_c = u \cdot \frac{d}{2} \cdot \sum P_{max} \cdot \frac{n_1}{n} \cdot K_1 \cdot K_2 \leqslant T_m$

T_c —— 计算转矩（kN·m，未计入组件惯量转矩与功耗）

u —— 车轮与钢轨间的摩擦系数，取0.15～0.20

d —— 车轮直径（m）

$\sum P_{max}$ —— 若一根联轴器驱动一个车轮，即为该车轮最大轮压（kN）
若一根联轴器驱动多个车轮，则为多个车轮最大轮压之和（kN）

n —— 联轴器运行转速（r/min）

n_1 —— 车轮运行转速（r/min）

K_1 —— 起重机工作级别系数（M3～M4取1.5；M5～M6取1.9；M7～M8取2.3）

K_2 —— 缓起缓停车轮无打滑现象取0.80～0.90，否则取1

T_m —— 联轴器许用转矩（kN·m，见联轴器型号规格性能表）

公式B（以机构最大功率计算选型）：

$T_c = \frac{T_{max}}{S} \cdot K_1 \leqslant T_m$

T_{max} —— 机构最大计算转矩 $T_{max} = 9.55 \frac{N_{max}}{n}$ (kN·m)

N_{max} —— 机构最大计算功率（kW，不是指电机功率，含组件惯量转矩与功耗）

S —— 机构驱动所需联轴器数量

起升机构联轴器型号规格选择

公式A（以工作机参数计算选型）：

$T_c = \frac{D}{2} \cdot \sum F_{max} \cdot \frac{n_2}{n} \cdot K_3 \leqslant T_m$

D —— 钢丝绳卷绕直径（m）

$\sum F_{max}$ —— 若一根联轴器驱动一个卷筒一根钢丝绳，即为该钢丝绳最大驱动拉力（kN）
若一根联轴器驱动多个卷筒或多根钢丝绳，则为多根钢丝绳最大驱动拉力之和（kN）

n_2 —— 卷筒运行转速（r/min）

K_3 —— 起重机工作级别系数（M3～M4取1.9；M5～M6取2.3；M7～M8取2.7），如有单电机暂替双电机运行工况取≥3.5

公式B（以机构最大功率计算选型）：

$T_c = T_{max} \cdot K_4 \leqslant T_m$

K_4 —— 起重机工作级别系数（M3～M4取1.9；M5～M6取2.3；M7～M8取2.7）

联轴器轴承寿命计算

$L_h = \frac{1.5 \cdot 10^7}{n \cdot \alpha} \left(\frac{A}{T_y}\right)^{10/3}$

L_h —— 不含停歇时间，净运行寿命（h）

α —— 联轴器运行夹角，$\alpha \leqslant 3°$ 时取3°

A —— 联轴器轴承容量值（见联轴器型号规格性能表）

T_y —— 运行转矩 $T_y = 9.55 \frac{N_y}{n}$（kN·m）

N_y —— 电机运行功率（kW，结合运行中最大功率及低谷功率，按实况平衡取值）

●公式A建模更清晰，建议优先选用。
●经乐清三丰传动优化的联轴器选型公式，供您参考选用。

联轴器两法兰联接型式(见法兰联接尺寸表)

从输入至输出，两法兰联接是联轴器可靠运行的重要组成部分。建议选用铰制孔配铰制孔用螺栓组联接型式—J，该结构具有联接性能可靠、综合效果好、性价比高等特点。推荐指数★★★★★

同时承接轴接手及配套螺栓组等附件订货。

确定联轴器使用工况

联轴器运行工况须确定运行夹角、总长度、伸缩量、防尘防水级别、环境温度范围、是否带载荷伸缩、运行转速及动平衡精度级别……

联轴器品质等级选择（见联轴器型号规格性能表）

十字轴式万向联轴器主要由十字轴总成、各种叉头、花键副等零部件组成。以往受工艺、成本等条件制约，叉头形面整体质量成一明显短板，提升其整体质量将对联轴器综合性能发挥具有较大价值。您可根据需要选择不同品质等级的联轴器：铸钢基础型组合—P；铸钢全加工质优价平型组合—Q；锻钢全加工高端轻奢型组合—G。根据行业发展趋势综合分析，铸钢全加工型组合具有品质优越、性价比高、可定制性强等特点，有广阔发展前景。推荐指数★★★★★

联轴器型号注释

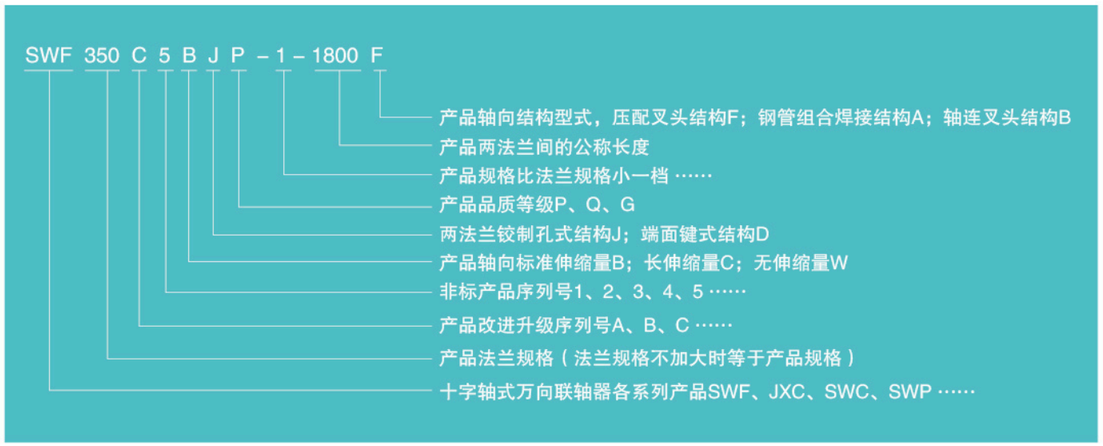

Model Selection of Cross Shaft Universal Coupling

Select series products with suitable and reliable structure and high cost performance as per different demands of operating conditions. According to the technical parameters and operating conditions you offered, YUEQING SANFENG TRANSMISSION CO., LTD. may recommend you the optimal overall solutions of transmission technologies.

Selection of Coupling Model and Specification for Operating Mechanism

Formula A (calculation and selection based on parameters of working machine):

$$T_c = u \cdot \frac{d}{2} \cdot \sum P_{max} \cdot \frac{n_1}{n} \cdot K_1 \cdot K_2 \leqslant T_m$$

T_c — Calculated torque (kN · m, not including component inertia torque and power consumption)

u — Friction coefficient between wheel and rail, ranging from 0.15 to 0.20

d — wheel diameter (m)

$\sum P_{max}$ — Maximum pressure of a wheel if a wheel is driven by a coupling (kN)

Sum of the maximum pressures of multiple wheels if multiple wheels are driven by a coupling (kN)

n_1 — Operating speed of wheel (r/min)

n — Operating speed of coupling (r/min)

K_1 — Working level coefficient of crane (1.5 for M3–M4; 1.9 for M5–M6; 2.3 for M7–M8)

K_2 — 1, or 0.80–0.90 for wheels that do not slip in slow start and stop

T_m — Allowable torque of coupling (kN · m, see the table for models, specifications and performance of coupling)

Formula B (calculation and selection based on maximum mechanism power):

$$T_c = \frac{T_{max}}{S} \cdot K_1 \leqslant T_m$$

T_{max} — Maximum mechanism calculated torque $T_{max} = 9.55 \frac{N_{max}}{n}$ (kN · m)

N_{max} — Maximum mechanism calculated power (kW, not the power of the motor, but including component inertia torque, power consumption and other loads acting on the coupling)

S — The number of couplings required for mechanism drive

Selection of Coupling Model and Specification for Hoisting Mechanism

Formula A (calculation and selection based on parameters of working machine):

$$T_c = \frac{D}{2} \cdot \sum F_{max} \cdot \frac{n_2}{n} \cdot K_3 \leqslant T_m$$

D — Winding diameter of steel wire rope (m)

$\sum F_{max}$ — Maximum tensile force of a steel wire rope if a steel wire rope in a drum is driven by a coupling (kN)

Sum of the maximum tensile forces of multiple steel wire ropes if multiple drums or multiple steel wire ropes are driven by a coupling (kN)

n_2 — Operating speed of drum (r/min)

K_3 — Working level coefficient of crane (1.9 for M3–M4; 2.3 for M5–M6; 2.7 for M7–M8), ⩾3.5 when a single motor serves a temporary substitute for dual motors.

Formula B (calculation and selection based on maximum mechanism power):

$$T_c = T_{max} \cdot K_4 \leqslant T_m$$

K_4 — Working level coefficient of crane (1.9 for M3–M4; 2.3 for M5–M6; 2.7 for M7–M8)

Calculation of Bearing Life of Coupling

$$L_h = \frac{1.5 \cdot 10^7}{n \cdot \alpha} \left(\frac{A}{T_y}\right)^{10/3}$$

L_h — Excluding down time, net operating life (h)

α — Operating angle of coupling, 3° when $\alpha \leqslant 3°$

A — Capacity value of coupling bearing (see the table for models, specifications and performance of coupling)

T_y — Operating torque $T_y = 9.55 \frac{N_y}{n}$ (kN · m)

N_y — Operating power of the motor (kW, balanced on the basis of the actual condition, in combination with the maximum power and off–peak power in operation)

- Formula A comes with clearer modeling and thus is more recommended.
- The selection formula of coupling optimized by Yueqing Sanfeng Transmission Co., Ltd. is provided for your reference.

Two–Flange Connection Pattern of Coupling (See the Flange connection size table)

Two–flange connection from input to output is a key component for the reliable operation of the coupling. Suggest to select connectionpatternfor hinged bolt set equipped for hinged hole – J. Such structure has the features of reliable connection performance, good comprehensive effect and high cost performance. The recommendation index is ★★★★★
Meanwhile we accept goods ordering for axis handle, matching bolt set, etc.

Confirmation of Operating Conditions of Coupling

For the operating conditions of the coupling, the operating include angle, total length, extension amount, dust prevention and water prevention grade, ambient temperature range, whether with load expansion, operating speed and dynamic balance accuracy level…

Selection of Coupling Quality Grade (see the table for models, specifications and performance of coupling)

The universal joint coupling is mainly composed of universal joint assembly, various forks, and spline pairs. Previously restricted by technology, cost and other conditions, the overall quality of the fork surface has become an obvious shortcoming, and improving this overall quality will play a valuable role in the comprehensive performance of the coupling. You may choose couplings of different quality grades to suit your needs: Basic cast steel portfolio – P; Fully processed high–quality but low–price cast steel portfolio – Q; Fully processed high–end and entry–luxury forged steel portfolio – G. Based on a comprehensive analysis on industry development trends, the fully processed cast steel portfolio, characterized by superior quality, high cost performance, and strong customizability, has broad development prospects. Recommendation Rating ★★★★★

Model notes of Coupling

SWF 350 C 5 B J P – 1 – 1800 F

- F — Pressure matching fork structure F of product axial structure pattern; combined welding structure A of steel tube; axis connection fork structure B
- 1800 — Nominal length between two flanges of the product
- P — Product specification is one gear smaller than the flange specification…
- Q, G — Product Quality Grade P, Q, G
- J — Structure with hinged hole for two flanges J; End face key structure D
- B — Axial standard extension amount of product B; long extension amount C; no extension amount W
- 5 — Serial No. of non–standard products 1, 2, 3, 4, 5 …
- C — Serial No. of product improvement and upgrading A,B,C…
- 350 — Product flange specification(Product flange specification (if the flange specification is not added, it is equal to the product specification))
- SWF — Each series products of Cross Universal Coupling SWF, JXC, SWC and SWP ……

十字轴式万向联轴器常用轴向结构型式图:
Ordinary axial Structure pattern for cross shaft universal coupling:

可伸缩分为标准伸缩量B型及超长伸缩量C型
It is of extension–type and it is classified into Type–B with standard extension amountand Type–C withsu–per–longextension amount

压配叉头结构—F
Pressure matching
fork structure—F

精度最佳，用量最多，质量稳定，可适用B型及C型
Best accuracy, most usage and stable quality,
suitable for Type—B and Type—C

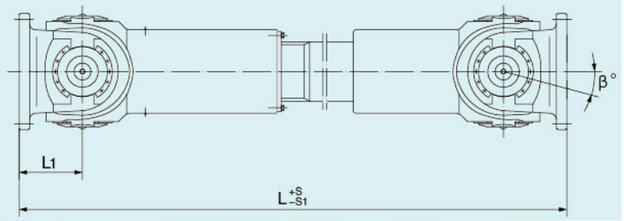

钢管组合焊接结构—A
Combined welding structure
of steel tube—A

适用较长产品的结构，可适用B型及C型
Applicable for structure of relatively long product,
suitable for Type—B and Type—C

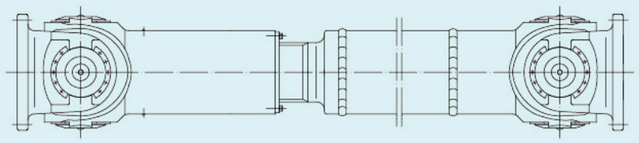

轴连叉头结构—B
Axle connection fork
structure—B

适用较短产品的结构，可适用B型及C型
Applicable for structure of relatively short
product, suitable for Type—B and Type—C

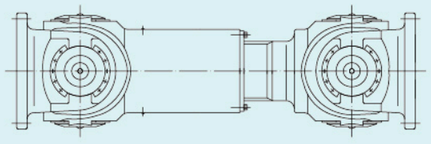

无伸缩W型（需配外置式伸缩）
Type–W without extension(requiring to be equipped with external extension)

四个法兰叉头或钢管组合焊接结构型式
Structure pattern for four flanges fork or steel
tubes in combined welding

从最短至最长的产品均可任意选择，两端轴接手一端紧固，另一端可轴向伸缩
Products (from the shortest to the longest) can be arbitrarily selected – fasten the axle at the end of holding, and axial extension is available on the other end

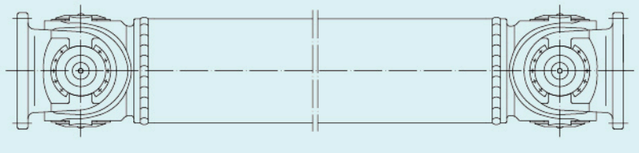

四个法兰叉头或钢管组合焊接外置伸缩超短结构型式
Super–short Structure pattern of external extension for four flanges fork or steel tubes in combined welding

利用一端轴接手紧固，另一端轴接手可轴向伸缩的超短结构方案
Scheme of making use of the axle at the end of holding to fasten the super–short structure of the other end whereaxial extension is available

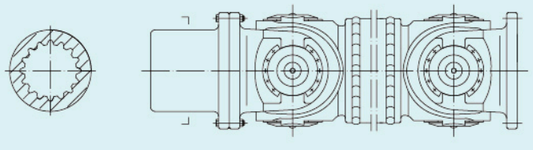

所有十字轴式万向联轴器在运行时轴向均需伸缩空间。两个法兰叉头一个十字轴总成的结构型式长度虽然可更短，但使用中会产生严重的干涉，一般不推荐使用。

The extension space is required for all cross shaft universal couplings at the axial direction during operation.Structure pattern of two flanges fork and one cross assembly although the length can be shorter, it will cause serious interference during use, thus it will not recommend to use it generally.

铰制孔配铰制孔用螺栓组法兰联接尺寸表
Size specification for flange connection of hinged bolt set equipped for hinged hole

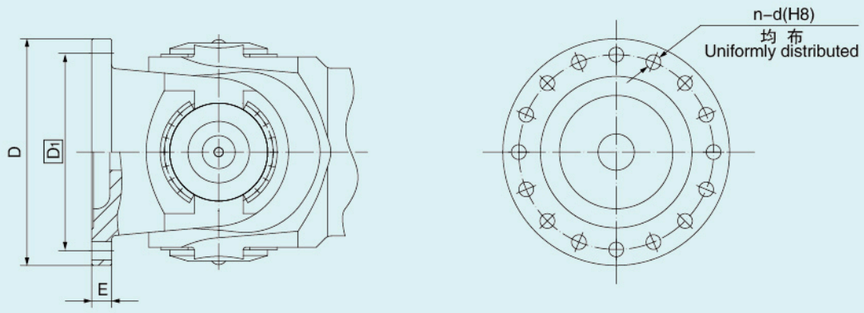

D	E	D1	n–d(H8)	铰制孔用螺栓 Bolt specification for hinged hole
100	8	85	8–Φ7	M6
110	8	95	8–Φ7	M6
120	10	105	10–Φ7	M6
140	11	125	8–Φ9	M8
150	11	135	12–Φ9	M8
160	13	140	12–Φ11	M10
180	13	160	14–Φ11	M10
200	16	175	14–Φ13	M12
225	18	200	14–Φ15	M14
250	21	225	16–Φ15	M14
285	25	255	16–Φ17	M16
315	25	285	24–Φ17	M16
350	30	315	24–Φ19	M18
390	30	355	28–Φ19	M18
435	35	400	30–Φ21	M20
440	35	405	30–Φ21	M20
480	35	445	30–Φ21	M20
490	40	445	26–Φ26	M24
550	45	505	30–Φ26	M24
620	50	575	36–Φ26	M24
680	55	630	34–Φ30	M27
780	65	720	32–Φ36	M33
840	70	780	34–Φ36	M33
920	75	855	34–Φ40	M36
1000	80	930	34–Φ43	M39
1100	90	1015	32–Φ50	M45
1200	100	1105	30–Φ57	M52

注：1. 螺栓组机械性能应符合GB/T3098规定
2. 选用橄榄形铰制孔用螺栓（专利号：ZL 2019 2 1730808.X），使用效果更佳
3. 铰制孔用螺栓M24以下规格选用10.9级，M24及以上规格选用12.9级，销杆部位公差h6

Notes:1. The mechanical property of the bolt set shall be able to meet the provisions of GB/T3098.
2. Olivary bolt (patent No.: ZL 2019 2 1730808.X) is selected for hinged hole,the effect is better.
3. Class–10.9 bolt is selected for hinged hole with specification of M24 below, Class–12.9 bolt is selected for hinged hole with specification of M24 and above, and the tolerance at the polished rod position is h6.

端面键配普通螺栓组法兰联接尺寸表
Size specification for flange connection of ordinary bolt set equipped for straight end–face key

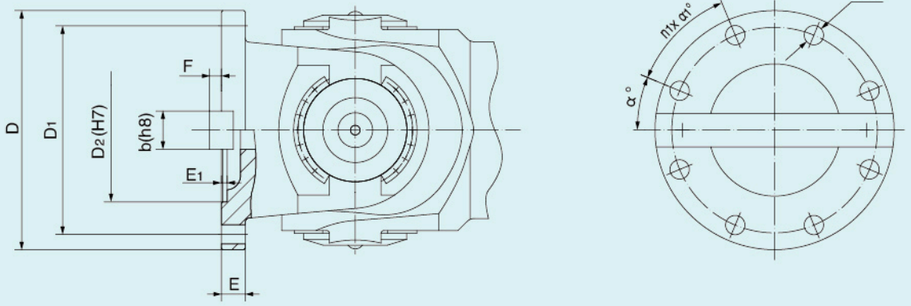

D	E	D1	n–d	螺栓 Bolt	α°	n1 × α1°	D2(H7)	E1	b(h8)	F	
100	7	84	6–Φ9	M8	30	1×60	57	2.5	–	–	
110	12	90	6–Φ9	M8	30	1×60	50	4	15	5	
120	8	102	8–Φ11	M10	22.5	1×45	75	2.5	–	–	
140	13	120	6–Φ11	M10	30	1×60	70	4	16	5	
150	10	130	8–Φ13	M12	22.5	1×45	90	3	–	–	
160	15	140	6–Φ13	M12	30	1×60	95	4	20	6	
180	17	155	8–Φ17.5	M16	22.5	1×45	105	5	–	–	仅用于SWC系列 Only used for SWC serie
180	15	155	6–Φ15.5	M14	30	1×60	105	4	24	7	
200	17	170	8–Φ17.5	M16	22.5	1×45	120	5	28	8	仅用于SWC系列 Only used for SWC series
200	17	175	8–Φ15.5	M14	22.5	1×45	125	5	28	8	
225	20	196	8–Φ17.5	M16	22.5	1×45	135	5	32	9	
250	25	218	8–Φ20	M18	22.5	1×45	150	6	40	12.5	
285	27	245	8–Φ22	M20	22.5	1×45	170	7	40	15	
315	32	280	10–Φ24	M22	30	2×30	185	8	40	15	
350	35	310	10–Φ24	M22	30	2×30	210	8	50	16	
390	40	345	10–Φ26	M24	30	2×30	235	8	70	18	
435	42	385	16–Φ29.5	M27	20	3×20	255	10	80	20	
440	42	390	16–Φ29.5	M27	20	3×20	255	10	80	20	
480	47	425	16–Φ33	M30	20	3×20	275	12	90	22.5	仅用于SWP系列 Only used for SWP series
490	47	435	16–Φ33	M30	20	3×20	275	12	90	22.5	
550	50	492	16–Φ33	M30	20	3×20	320	12	100	22.5	
620	55	565	16–Φ33	M30	20	3×20	380	12	100	25	
680	65	615	16–Φ39	M36	20	3×20	400	15	120	30	
780	65	715	18–Φ39	M36	18	4×18	460	15	120	30	
840	80	765	22–Φ39	M36	15	5×15	500	18	150	38	
920	80	830	22–Φ45	M42	15	5×15	550	18	150	38	
1000	100	900	22–Φ51	M48	15	5×15	600	22	180	45	
1100	100	1000	22–Φ51	M48	15	5×15	660	22	180	45	
1200	120	1080	22–Φ63	M60	15	5×15	720	25	200	50	

注：1. 螺栓组机械性能应符合GB/T3098规定
2. 选用10.9级普通螺栓组

Notes: 1. The mechanical property of the bolt set shall be able to meet the provisions of GB/T3098.
2. Selection of regular bolt sets grade–10.9

JXC系列、SWF系列型号规格性能表
Specification and Performance Table of JXC Series and SWF Series

型号 Model	P	Q	G	A	β	L1	S	S1	L–Fmin	L–Bmin	G0	G100	I0	I100
	Tm (kN · m)					mm					kg		kg · m²	
JXC110	2.2	2.7	3	0.63	≤25°	65	20	15	440	365	16	1.43	0.016	0.0004
JXC140	5	6	6.6	1.44		85			545	450	35	2.38	0.056	0.0011
JXC160	7.8	9.5	10.2	2.2		95	25	20	630	510	53	3.21	0.1	0.002
JXC180	12	15	16.2	3.19		105			695	565	70	3.77	0.186	0.0028
JXC200	18	25	27	4.78		125	30	25	810	650	105	5.25	0.344	0.0055
JXC225	28	34	37.5	6.6		140	35		885	720	146	6.45	0.61	0.008
SWF200	30	36	42	6.5	≤15°	120	35	25	870	630	149	6.45	0.45	0.008
SWF225	46	55	63	9.52		140	40		975	710	200	7.78	0.82	0.012
SWF250	57	68	76	12.23		150		30	1075	785	264	9.69	1.36	0.019
SWF285	88	104	117	17.56		170	50	35	1225	890	382	12.15	2.55	0.03
SWF315	126	148	166	23.35		190	55		1350	985	538	15.87	4.37	0.05
SWF350	192	223	253	34.65		210	60	40	1495	1095	744	20.09	7.47	0.08
SWF390	248	293	332	45.8		230			1645	1295	1030	24.8	12.8	0.12
SWF435	373	440	500	66.9		260	75	45	1840	1495	1511	30	21.7	0.182
SWF490	524	615	700	95.4	≤12°	280	85	55	2010	1590	2035	35.7	37	0.25
SWF550	703	824	940	130.6		315	95	60	2290	1800	3015	48.6	69.5	0.47
SWF620	1035	1227	1390	186.8		355	105	65	2590	2040	4390	63.49	128	0.81
SWF680	1460	1700	1920	249.3		390			2820	2240	5710	76	201	1.16
SWF780	2295	2680	3020	379.3		450	120	85	3300	2580	8800	104	406	2.18
SWF840	2810	3300	3700	456		480			3530	2760	11037	120	587	2.9
SWF920	3570	4180	4700	575		525	150	100	3860	3030	14177	143	908	4.11
SWF1000	4710	5400	6200	744		575			4190	3280	18210	168	1380	5.66
SWF1100	6400	7400	8430	998		630	180	120	4620	3630	24100	201	2200	8.18
SWF1200	8200	9500	10810	1275		700			5050	3970	31300	238	3388	11.45

注：1. 统一纠正以往联轴器性能参数误差的同时，更进一步优化设计，提升联轴器性能指标
2. Tm — 许用转矩。铸钢基础型组合 — P；铸钢全加工质优价平型组合 — Q；锻钢全加工高端轻奢型组合 — G
3. 脉动疲劳转矩 = 0.87 Tm；对称疲劳转矩 = 0.6 Tm
4. A — 反应轴承容量的值
5. L–Fmin、L–Bmin — 分别为压配叉头轴向结构型式和轴连叉头轴向结构型式的最短长度
6. G0 — 在最短长度L–Fmin时的自重
7. I0 — 在最短长度L–Fmin时的传动惯量
8. G100、I100 — 长度每增加100mm时的G、I增量
9. 如需非标产品，乐清三丰传动亦可设计制造

Notes: 1. While the performance parameter errors of previous couplings are uniformly corrected, the design is further optimized to improve the performance indicators of the coupling;
2. Tm–Allowable torque. Basic cast steel portfolio – P; Fully processed high–quality but low–price cast steel portfolio – Q; Fully processed high–end and entry–luxury forged steel portfolio – G;
3. Pulsating fatigue torque = 0.87 Tm; symmetrical fatigue torque = 0.6Tm;
4. A – Capacity value of coupling bearing;
5. L–Fmin and L–Bmin – Respectively the shortest length of the pressure matching fork structure and axle connection fork structure;
6. G0 – Dead weight at the shortest length of L–Fmin;
7. I0 – Transmission inertia at the shortest length of L–Fmin;
8. G100 and I100 – G & I increments when the length increases 100mm;
9. YUEQING SANFENG TRANSMISSION CO., LTD. also can design and manufacture as required non–standard products.

SWC系列、SWP系列型号规格性能表
Specification and Performance Table of SWC Series and SWP Series

型号 Model	P–Tm	P–Tp	P–Tf	A	β	L1	S	S1	L–Fmin	L–Bmin	G0	G100	I0	I100
	kN · m					mm					kg		kg · m²	
SWC100	2	1.75	1.2	0.64	≤25°	60	30	30	400	385	10	1.1	0.0068	0.0002
SWC120	3.5	3	2.1	1.1		70	40	40	480	455	17.8	1.42	0.0166	0.0004
SWC150	7.5	6.5	4.5	2.21		85			590	545	37	2.38	0.05	0.0011
SWC180	16	13.9	9.6	4		110	50	50	790	680	79	3.77	0.178	0.0028
SWC200	28	24.4	16.8	5.5	≤15°	115	55	55	825	730	110	5.25	0.33	0.0055
SWC225	39	33.9	23.4	7.67		120	70	70	870	750	151	6.45	0.56	0.0084
SWC250	48	41.8	28.8	10.4		140			985	810	205	7.78	0.98	0.0122
SWC285	74	64.4	44.4	15.4		160			1140	930	301	9.69	1.875	0.019
SWC315	100	87	60	20.3		180			1270	1035	418	12.15	3.151	0.0298
SWC350	131	114	78.6	28.8		194	75	75	1390	1145	571	15.87	5.417	0.051
SWC390	229	199	138	39.9		215	85	85	1530	1240	810	20.09	9.322	0.081
SWC440	332	289	199	55.5		260	95	95	1830	1480	1314	30	20.16	0.182
SWC490	443	385	266	77.8		270			2010	1610	1690	35.7	31.53	0.257
SWC550	625	544	375	111.6		305	120	120	2300	1840	2583	48.6	60.65	0.476
SWC620	874	761	525	149		340			2600	2060	3755	63.5	111.6	0.81
SWP160	10.4	9	6.2	2.89	≤12°	85	25	15	620	455	55	3.2	0.11	0.0021
SWP180	13	11.3	7.8	4.16		95	30	20	700	510	77	4.16	0.19	0.0035
SWP200	17.5	15.2	10.5	5.84		110	35		800	580	109	5.24	0.34	0.0056
SWP225	24.5	21.3	14.7	7.64		130	40	25	925	670	158	6.45	0.63	0.0084
SWP250	33	28.7	19.8	10.8		135		30	980	720	205	7.78	1.01	0.0122
SWP285	53	46.1	31.8	15.6		150	50	35	1100	800	295	9.7	1.88	0.0189
SWP315	84	73	50.4	21.6		170	55		1240	900	413	12.15	3.17	0.03
SWP350	109	95	65.4	28.7		185	60	40	1400	990	581	15.87	5.38	0.051
SWP390	140	122	84	38.3		205			1480	1100	794	20.09	9.2	0.081
SWP435	264	230	159	53.5		235	75	45	1720	1240	1150	24.8	16.53	0.124
SWP480	370	322	222	71.9		265	85	55	1920	1390	1550	30	27.26	0.182
SWP550	561	488	337	103.6		290	95	60	2100	1530	2150	35.7	50.44	0.257

注：1. 统一纠正以往联轴器性能参数误差的同时，更进一步优化设计，提升联轴器性能指标
2. P–Tm、P–Tp、P–Tf — 分别为铸钢基础型组合许用转矩、脉动疲劳转矩及对称疲劳转矩
3. A — 反应轴承容量的值
4. L–Fmin、L–Bmin — 分别为压配叉头轴向结构型式和轴连叉头轴向结构型式的最短长度
5. G0 — 在最短长度L–Fmin时的自重
6. I0 — 在最短长度L–Fmin时的传动惯量
7. G100、I100 — 长度每增加100mm时的G、I增量
8. 如需非标产品，乐清三丰传动亦可设计制造

Notes: 1. While the performance parameter errors of previous couplings are uniformly corrected, the design is further optimized to improve the performance indicators of the coupling;
2. P–Tm、P–Tp and P–Tf Respectively allowable torque, pulsating fatigue torque and symmetrical fatigue torque;
3. A – Capacity value of coupling bearing;
4. L–Fmin and L–Bmin – Respectively basic cast steel portfolio the shortest length of the pressure matching fork structure and axle connection fork structure;
5. G0 – Dead weight at the shortest length of L–Fmin;
6. I0 – Transmission inertia at the shortest length of L–Fmin;
7. G100 and I100 – G & I increments when the length increases 100mm;
8. YUEQING SANFENG TRANSMISSION CO., LTD. also can design and manufacture as required non–standard products.

十字轴式万向联轴器同步运转所需条件
Conditions Required for Synchronous Running of Universal Coupling with Cross Shaft

十字轴式万向联轴器需同时满足以下三项条件才能同步运转，即输入端、输出端与轴线形成的夹角相等；输入端、输出端、联轴器三轴线在同一平面内；输入端与输出端的叉头轴承中心线在同一平面内。（您如将花键副分开后再装回时务必恢复输入端与输出端的叉头轴承中心线在同一平面内）。

Universal Coupling with Cross Shaft needs to satisfy following three conditions simultaneously for synchronous running, namely the included angles formed by the input and output ends and the axis and equal; the input end, output end and coupling are within the same plane; the fork bearing center lines of the input end and output end are on the same plane. (If you separate the spline pairs, and then reload them, please recover the fork bearing center lines of the input end and output end onto the same plane).

十字轴式万向联轴器安装维护
Installation and Maintenance of Universal Coupling with Cross Shaft

从输入至输出，两法兰联接是联轴器重要组成部分，直接关系到整个传动链可靠性及各部件性能和寿命。安装时应先清除各安装面的油污异物，检查相关接触面须符合技术要求。参照技术要求反复预紧螺栓组并采取防松措施（可涂厌氧胶防松），且在运行中经常检查螺栓组的预紧可靠性。

十字轴式万向联轴器出厂时各需润滑部位已注2#极压复合锂基脂，您可选用相应牌号清洁的润滑脂按工况注油（次/1～3月），每次注油后须拧好油堵。

改善使用工况环境对产品使用寿命意义重大，如您发现有异常情况，应及时检查排除，必要时请及时更换。

Two–flange connection from input to output is a key component of the coupling and it is directly related to the reliability of the whole transmission chain and the performance and life of each component. Firstly, remove the oil stains and foreign matters on each installation surface at the time of installation, and inspect and ensure that related contact surfaces must conform to the technical requirements. Refer to technical requirements, repeatedly pre–tighten the bolt set and adopt loose prevention measures (it is allowed to be coated with anaerobic adhesive to prevent looseness), and check the pre–tightening reliability of the bolt set frequently during operation.

When leaving the factory, the Universal Coupling with Cross Shaft has been injected with Compound extreme pressure lithium–based grease 2# on each lubrication point. You can select clean lubricating grease with corresponding brand for oil injection (1–3 months per time) as per the operating conditions. Screw the oil plug after every time of oil injection.

Improving the applied operating conditions is of significant meaning for the service life of the product. If you discover any abnormal condition, please timely inspect and eliminate it, and replace it on time when necessary.

球铰式卷筒联轴器
SPHERICAL JOINT TYPE DRUM COUPLING

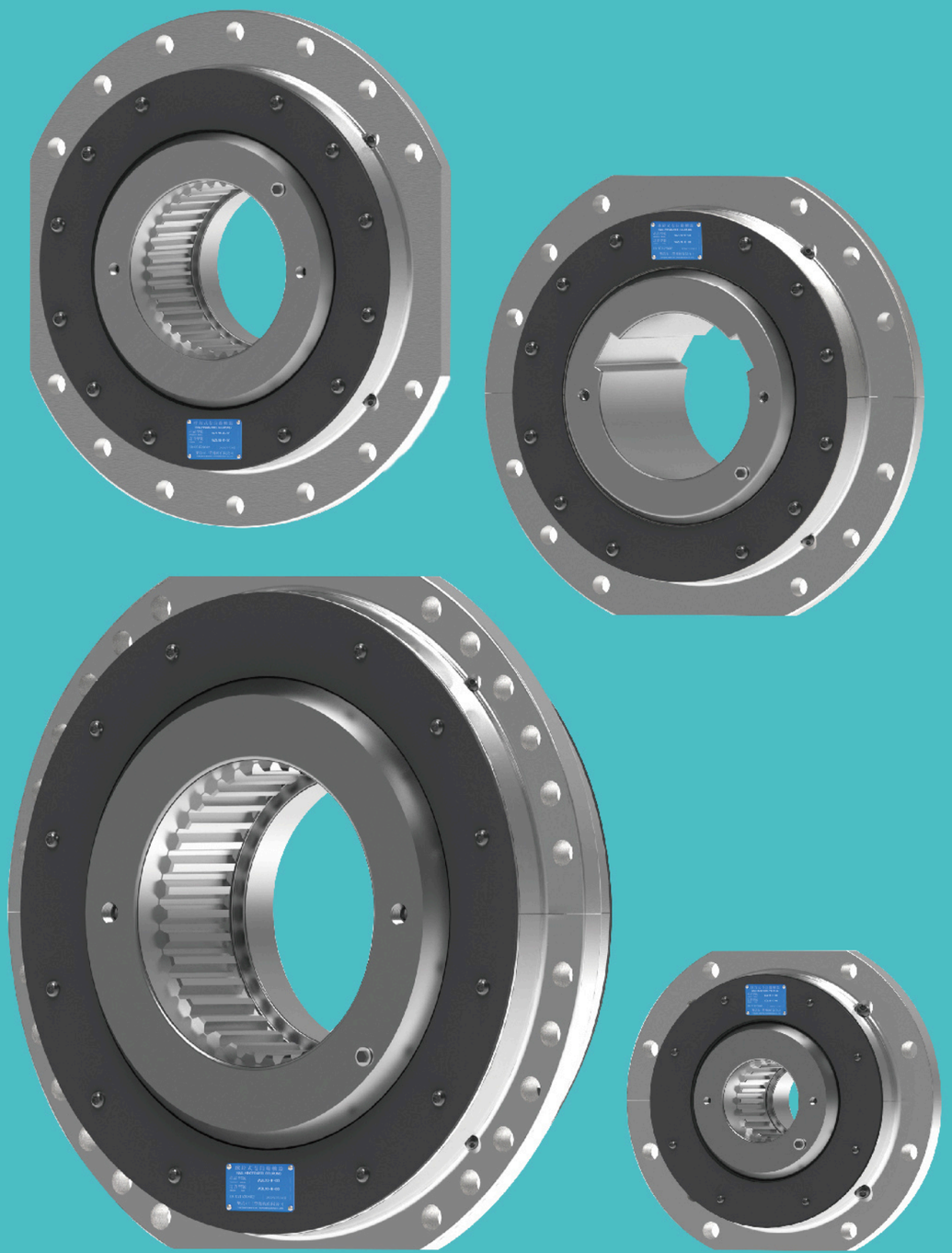

WZL系列球铰式卷筒联轴器概述

乐清三丰传动开发的WZL系列球铰式卷筒联轴器是当今国际上最先进理想的卷筒联轴器，拥有多项自主知识产权。该系列产品积木化式结构的各部件厚实耐用，径向承受载荷大，传递转矩大，正常使用磨损小，可靠性高，无安全失效之忧，因此无需像其他老式产品使用寿命以指针对照。包裹在球面之间的特殊键转动灵活且转动幅度较大，便于安装调试。该系列产品广泛应用于高级别的起重设备，也可适用于其他类似机械设备，是替代鼓形齿式和鼓形滚子式卷筒联轴器的理想产品。

WZL系列球铰式卷筒联轴器选型

根据起重机的规格及工作级别，通过验算确定卷筒联轴器最大载荷所需传递转矩（应考虑试车时的过载系数和其他因素，计算转矩≤卷筒联轴器对应起重机工作级别的许用转矩），选择合适型号规格的卷筒联轴器。若无特殊情况，卷筒联轴器一般无需另作径向载荷验算。

联轴器型号规格选择

公式A（以工作机参数计算选型）：

$T_c = \frac{D}{2} \cdot \sum F_{max} \leqslant T_m$

T_c —— 计算转矩（kN·m）

D —— 钢丝绳卷绕直径（m）

$\sum F_{max}$ —— 若联轴器驱动一根钢丝绳，即为该钢丝绳最大驱动拉力（kN）
若联轴器驱动多根钢丝绳，则为多根钢丝绳最大驱动拉力之和（kN）

T_m —— 联轴器许用转矩，对应工作级别取值（kN·m，见联轴器型号规格性能表）

公式B（以机构最大功率计算选型）：

$T_c = T_{max} \leqslant T_m$

T_{max} —— 机构最大计算转矩 $T_{max} = 9.55 \frac{N_{max}}{n}$ (kN·m)

N_{max} —— 机构最大计算功率（kW，不是指电机功率，含组件惯量转矩与功耗）

n —— 联轴器运行转速（r/min）

●公式A建模更清晰，建议优先选用。
●经乐清三丰传动优化的联轴器选型公式，供您参考选用。

联轴器型号注释

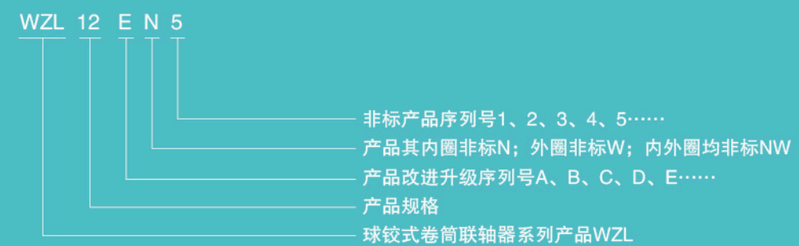

Overview of WZL Series Drum Coupling with Spherical Hinge

WZL series Drum Coupling with Spherical Hinge developed by YUEQING SANFENG TRANSMISSION CO., LTD. is the most advanced and ideal drum coupling in current world, and it possesses multiple independent intellectual property rights. Each component of modularized structure for this series of products is thick and durable with big radial load and transmission torque, less abrasion under normal use and high reliability and no worry in safety or effect. Therefore, it does not need to be compared with pointer in service life like other outdated products. Special keys wrapped among spherical surfaces rotate flexibly with big rotation range and it is convenient for installation and debugging. This series of products are widely applied in high–level hoisting equipment and it is also applicable for other similar mechanical equipment. It is the ideal product to replace the drum couplings with drum gear and drum roller.

Model Selection of WZL Series Drum Coupling with Spherical Hinge

According to the working class and specifications of the crane, confirm the transmission torque (consider the overload ratio and other factors at the time of test run) required for the maximum load of the drum coupling through checking calculation and select the drum coupling (theoretical torque ≤ allowable torque of the crane corresponding to the drum coupling at the working class) with suitable specification and model. There is no excep–tional case, and otherwise checking calculation for radial load is not required for the drum coupling generally.

Selection of Coupling Model and Specification

Formula A (calculation and selection based on parameters of working machine):

$T_c = \frac{D}{2} \cdot \sum F_{max} \leqslant T_m$

T_c — Calculated torque (kN · m)

D — Winding diameter of steel wire rope (m)

$\sum F_{max}$ — Maximum tensile force of a steel wire rope if a steel wire rope in a drum is driven by a coupling (kN)
Sum of the maximum tensile forces of multiple steel wire ropes if multiple drums or multiple steel wire ropes are driven by a coupling (kN)

T_m — Allowable torque of coupling, depending on the corresponding working level (kN · m , see the table for models, specifications and performance of coupling)

Formula B (calculation and selection based on maximum mechanism power):

$T_c = T_{max} \leqslant T_m$

T_{max} — Maximum mechanism calculated torque $T_{max} = 9.55 \frac{N_{max}}{n}$ (kN · m)

N_{max} — Maximum mechanism calculated power (kW, not the power of the motor, but including component inertia torque, power consumption and other loads acting on the coupling)

n — Operating speed of coupling (r/min)

- Formula A comes with clearer modeling and thus is more recommended.
- The selection formula of coupling optimized by Yueqing Sanfeng Transmission Co., Ltd. is provided for your reference.

Model notes of Coupling

WZL 12 E N 5

- 5 — Serial No. of non–standard products 1, 2, 3, 4, 5 ···
- N — N for non–standard for inner ring of the product; W for non–standard for outer ring; NW for non–standard for inner ring and outer ring
- E — Serial No. of product improvement and upgrading A, B, C, D, E···
- 12 — Production specifications
- WZL — WZL series Drum Coupling with Spherical Hinge

WZL系列球铰式卷筒联轴器的安装维护
Installation and Maintenance of WZL Series Drum Coupling with Spherical Hinge

WZL系列球铰式卷筒联轴器与相关部件相联接的质量，对整体使用效果和使用寿命影响很大，请您参照＂WZL系列使用示意图＂中相关要求认真对照。WZL系列球铰式卷筒联轴器在安装过程中夹角可达3°，但使用中严格控制夹角误差(＜20′)，安装精度越高夹角误差越小，使用效果越好，使用寿命则会大幅度延长。如与减速机轴采用热装工艺，建议采用整体加热，加热温度控制在130℃以内，冷却后请及时充分注油（请不要将卷筒联轴器拆解，否则将无法保证其品质）。

WZL系列球铰式卷筒联轴器出厂时已注2#极压复合锂基脂，一般工况建议每月注油不少于一次，四个油咀均设在卷筒联轴器法兰根部（油咀螺纹M10*1），连接注油管将其转至下方，依次注油，直至油脂从球面各处充分溢出。

WZL系列球铰式卷筒联轴器平均使用寿命达5年左右，但与＂WZL系列使用示意图＂中相关部件匹配质量、安装质量、维护质量、实际运行夹角、选型大小及起重机工况均有较大关系。如您发现有异常情况，应及时检查排除，必要时请及时更换。

The connection quality of WZL series Drum Coupling with Spherical Hinge and related components has a big impact on the overall use effect and service life, please refer to related requirements in Figure for careful comparison. During installation, the included angle of WZL series Drum Coupling with Spherical Hinge can reach 3° , but the error (< 20′) in included angle is strictly controlled during use. The higher the installation accuracy is, the smaller the error in included angle will be and meanwhile the better the use effect will be, and the service life will be greatly extended. If the reducer shaftadopts the hot charging technology, suggest adopting integral heating and control the heating temperature within 130℃. Timely and sufficiently inject the oil (don’t separate the drum coupling, otherwise the quality cannot be guaranteed) after cooling.

WZL series Drum Coupling with Spherical Hinge was injected with grease (Compound extreme pressure lithium–based grease 2#) when leaving the factory. Suggest making at least one time of oil injection every month for general operating conditions. Four oil nozzles are all set at the root (oil nozzle thread M10*1) of the drum coupling flange, connecting the oil filling pipe, switch it to the bottom and inject the oil successively, till the grease fully overflows from each position of the spherical surface.

WZL series Drum Coupling with Spherical Hinge has a service life of about 5 years. However, it is closely related to the matching quality, installation quality, maintenance quality, actually used included angle and size of the selected model of related components in Figure as well as the operating condition of the crane. If you discover any abnormal condition, please timely inspect and eliminate it, and replace it on time when necessary.

WZL系列尺寸对照图
Size Comparison Diagram for WZL Series

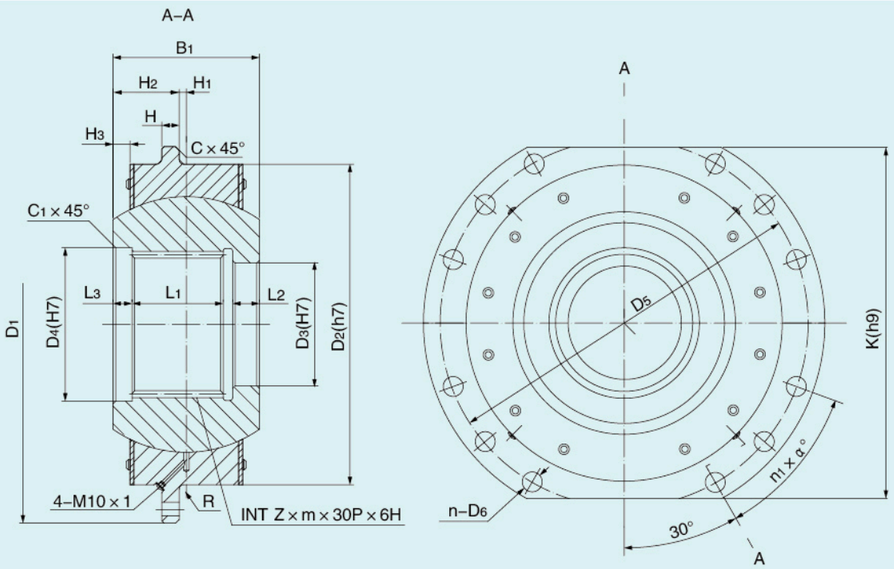

WZL系列使用示意图
Use Comparison Diagram for WZL Series

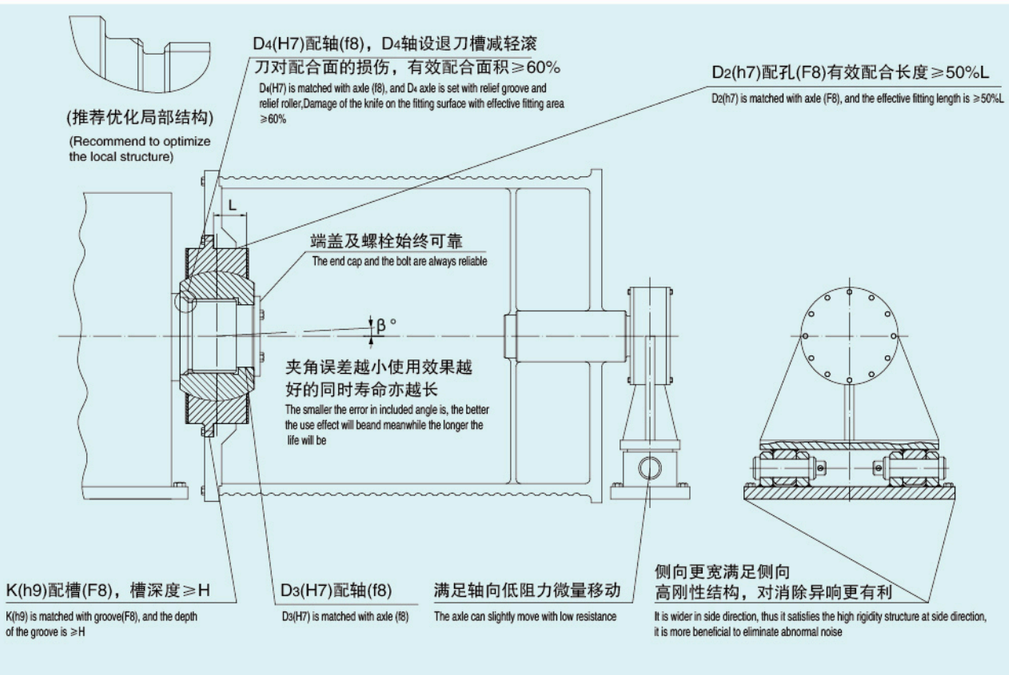

WZL系列型号规格性能表
Specification and Performance Table of WZL Series

型号 Model		WZL01	WZL02	WZL03	WZL04	WZL05	WZL06	WZL07	WZL08	WZL09	WZL10	WZL11	WZL12	WZL13	WZL14	WZL15	WZL16	WZL17	WZL18
工作级别·许用转矩（kN·m） Working class and Allowable torque	M3	6.4	9.4	14	17.5	22	27	44	66	89	138	212	308	395	520	650	830	1152	1550
	M4	5.7	8.4	12.4	15.5	19.5	24	39	58.5	79	122	188	274	352	463	578	730	1025	1380
	M5	5.1	7.4	11	13.5	17	21	34.5	52	70	109	167	243	312	411	514	656	910	1225
	M6	4.5	6.6	9.9	12	15.5	19	31	46.5	63	98	150	216	277	369	462	589	818	1085
	M7	4.1	5.9	8.8	11	13.5	17	27.5	41.5	56	87	133	194	249	328	410	523	726	977
	M8	3.55	5.25	7.8	9.8	12	15	24.5	37	50	77	118	172	221	291	364	465	645	868
INT Z×m×30P×6H (GB/T3478.1)		15Z×3m	18Z×3m	22Z×3m	27Z×3m	18Z×5m	22Z×5m	26Z×5m	30Z×5m	34Z×5m	38Z×5m	26Z×8m	30Z×8m	34Z×8m	38Z×8m	44Z×8m	50Z×8m	44Z×10m	56Z×10m
K(h9)		250	280	300	320	340	360	400	450	500	530	580	600	640	700	760	860	1020	1100
B_1		80	84	92	97	127	137	157	167	182	192	207	222	237	262	287	352	410	430
D_1		300	320	340	360	380	400	450	500	550	580	650	680	710	780	850	950	1120	1200
D_2(h7)		190	200	220	240	260	280	340	380	420	450	530	560	600	670	730	840	975	1055
D_3(H7)		40	50	60	70	80	100	120	140	160	180	190	220	250	280	320	360	400	540
D_4(H7)		50	60	70	85	100	120	140	160	180	200	222	254	286	318	366	420	460	580
D_5		260	280	300	320	340	360	400	450	500	530	600	630	660	730	800	900	1055	1135
H		12	15	20					25			30		40			55	60	70
H_1		3		4		5			6			7		8		9	10	15	25
H_2		37	39	43	44.5	59.5	63.5	73.5	77.5	85	90	96.5	104	110.5	123	134.5	166	190	190
H_3		2	2.5		3.5		4.5	5.5	6	7	7.5	8	9.5	11	12	13	17	18	
L_1		30		35	40	50	55	70	75	85	95	105	120	135	150	170	220	260	270
L_2		18	22	25		30	35	40	45					55	60				
L_3		22				37											52	65	70
n–D_6		8–Φ14	8–Φ18.5			12–Φ23						24–Φ23	24–Φ27.5				24–Φ31		
螺栓 Bolt		M12	M16			M20							M24				M27		
$n_1 \times \alpha°$		1×40				2×20						5×10							
R		1.6	2			2.5							3				4		
C		1				1.5							2				2.5		
C_1		1.6	2		2.5		3			4		5			6				
转动惯量kg·m² Rotational inertia		0.13	0.19	0.27	0.37	0.56	0.76	1.65	2.86	4.49	6.18	12.5	16.4	23.13	39.18	59.25	114.5	260.4	337.8
重量kg Weight		23	27	33	39	55	66	106	140	185	213	330	379	453	616	775	1375	2145	2475

注：如需非标产品，乐清三丰传动亦可设计制造
Notes: YUEQING SANFENG TRANSMISSION CO., LTD. also can design and manufacture as required non–standard products.

鼓形齿式联轴器
GROWN GEAR COUPLING

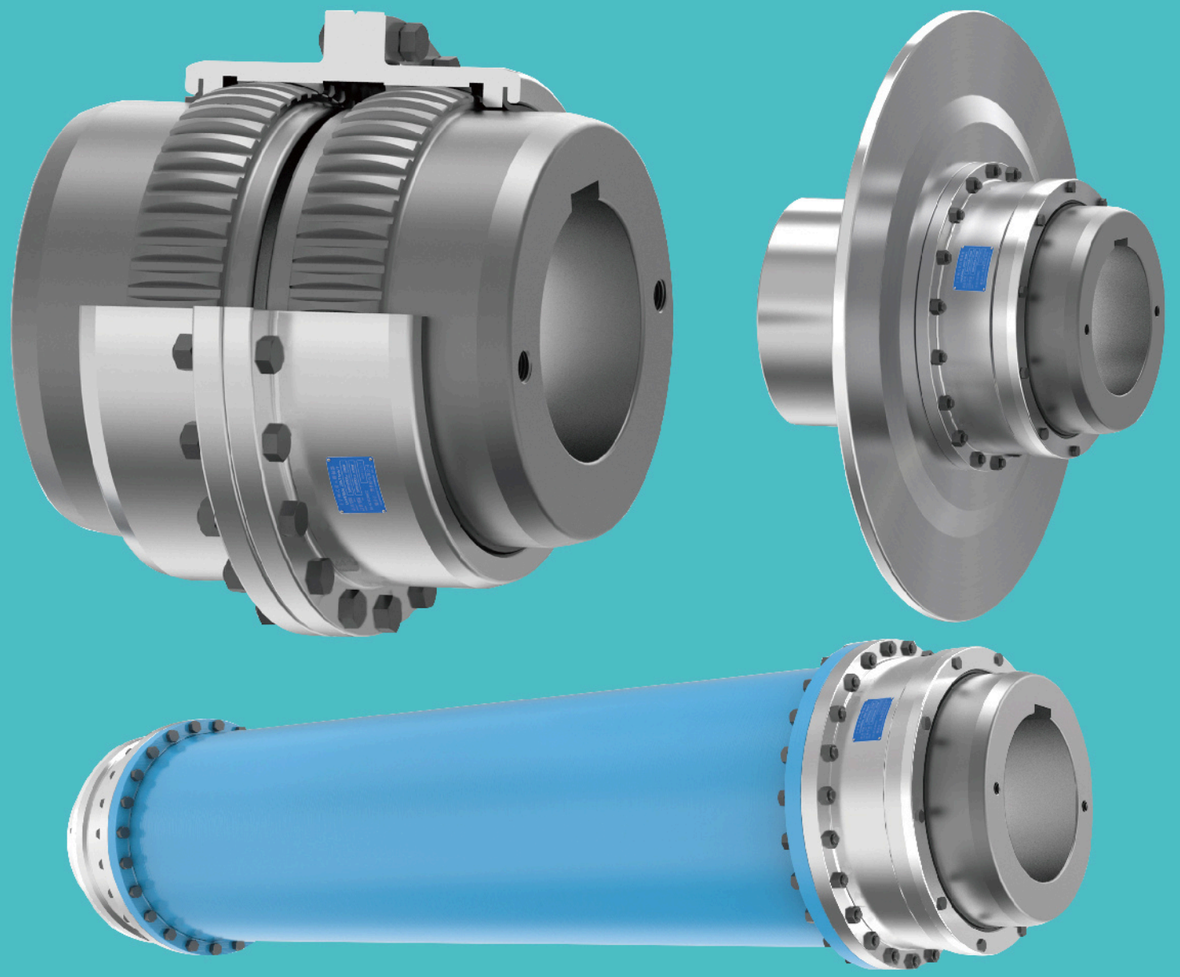

鼓形齿式联轴器概述
Overview of Grown Gear Coupling

鼓形齿式联轴器由相同齿数及模数的鼓形外齿配合直内齿组成，能在额定夹角及轴向伸缩范围内传递额定转矩，具有结构简单、制造成本较低等优点。因受产品结构限制，运行夹角一般不大于1° 30′，减小运行夹角对增加鼓形齿式联轴器使用寿命效果显著。

乐清三丰传动根据鼓形齿式联轴器相关标准作进一步结构优化设计，并灵活选择不同材料和热处理工艺，以满足不同工况使用要求。更多的相关内容请您登陆乐清三丰传动网站或参照相关标准对鼓形齿式联轴器的详细介绍，欢迎您与我们作进一步的技术、商务洽谈。

Grown gear coupling is composed of drum external gears and internal straight gears with same number of gears and modules. It can transmit the rated torque within rated included angle and extension range and it has simple structure, low manufacturing cost and other advantages. As limited by the product structure, the applied included angle does not exceed 1°30′ generally. Decreasing the applied included angle has obvious effect in improving the service life of the grown gear coupling

YUEQING SANFENG TRANSMISSION CO., LTD. makes further structural optimization design for standards related with grown gear coupling and flexibly selects different materials and heat processing technologies to meet the operating requirements of differ–ent operating conditions. For more relevant contents, please log into the website of YUEQING SANFENG TRANSMISSION CO., LTD. or refer to detailed introductions of grown gear coupling. Waiting to make technical or business discussions with you.

普通螺栓组预紧力矩表（N·m）
Table of Pretightening Torque of Ordinary Bolt Set

螺纹规格d×p Thread Specification	8.8 级class	10.9 级class	12.9 级class
M5×0.8	5	7	8.5
M6×1	8.5	12	14
M8×1.25	20	28	35
M10×1.5	40	58	70
M12×1.75	71	100	120
M14×2	115	160	195
M16×2	175	250	300
M18×2.5	245	345	410
M20×2.5	350	490	585
M22×2.5	470	660	790
M24×3	600	840	1000

螺纹规格d×p Thread Specification	8.8 级class	10.9 级class	12.9 级class
M27×3	870	1225	1470
M30×3.5	1190	1670	2020
M33×3.5	1600	2250	2700
M36×4	2050	2860	3450
M39×4	2580	3630	4360
M42×4.5	3200	4320	5200
M45×4.5	3830	5300	6460
M48×5	4600	6500	7800
M52×5	5900	8300	9900
M56×5.5	7300	10000	12400
M60×5.5	9200	13000	15000



铰制孔用螺栓组预紧力矩表（N·m）
Table of Pretightening Torque of Bolt Set for Hinged hole

螺纹规格d×p Thread Specification	8.8 级class	10.9 级class	12.9 级class
M6×1	6	8.4	9.8
M8×1.25	14	20	25
M10×1.5	28	41	49
M12×1.75	50	70	84
M14×2	81	112	137
M16×2	123	175	210
M18×2.5	172	242	287
M20×2.5	245	345	410
M22×2.5	330	465	555
M24×3	420	590	700

螺纹规格d×p Thread Specification	8.8 级class	10.9 级class	12.9 级class
M27×3	610	860	1030
M30×3.5	835	1170	1420
M33×3.5	1120	1575	1890
M36×4	1435	2010	2420
M39×4	1810	2550	3060
M42×4.5	2240	3030	3640
M45×4.5	2680	3760	4520
M48×5	3240	4550	5460
M52×5	4140	5810	6930
M56×5.5	5150	7210	8680

注：1. 螺栓组机械性能应符合GB/T3098规定
2. 螺栓预紧力矩根据相关机械设计手册整理编辑，供您参考

Notes: 1. The mechanical property of the bolt set shall be able to meet the provisions of GB/T3098.
2. The pretightening torque of bolt is collated and edited as per related mechanical design manual for your reference.

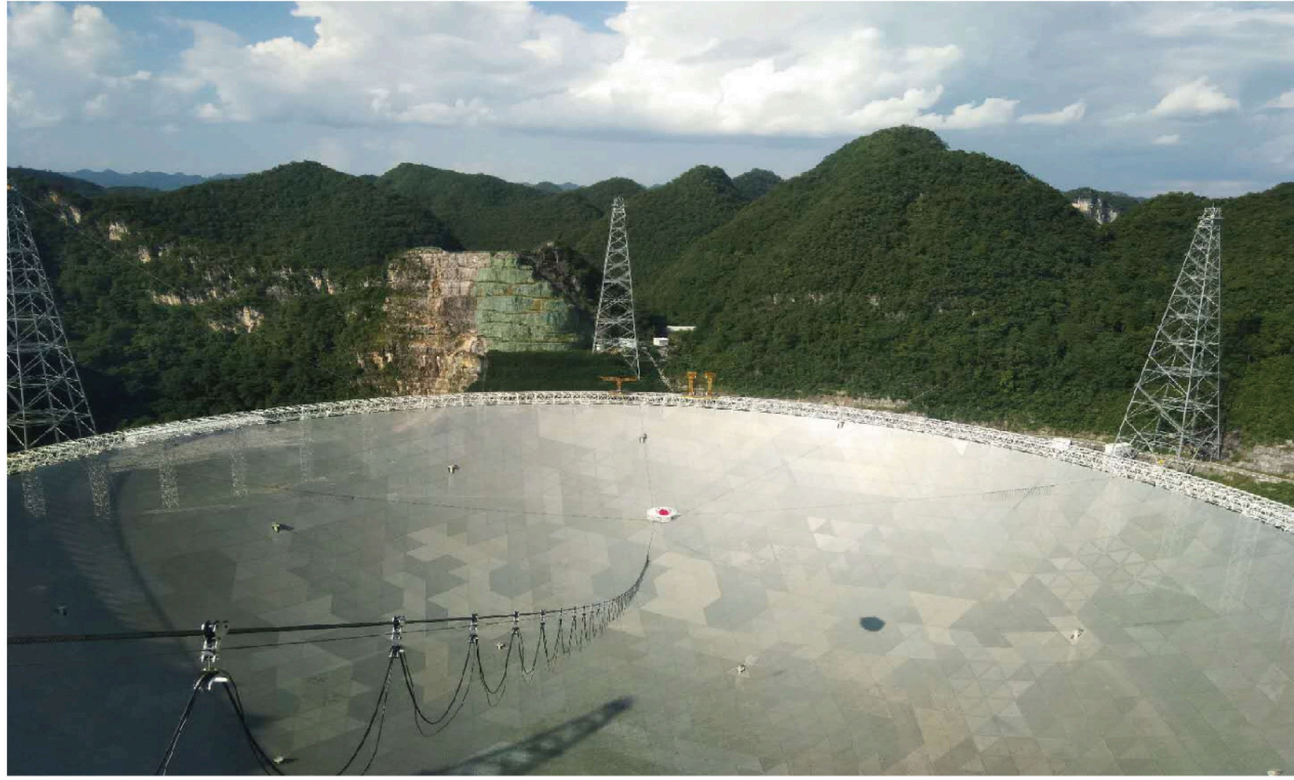

世界最大球面射电望远镜由 **乐清三丰传动** 提供WZL系列球铰式卷筒联轴器
The world's largest spherical radio telescope is provided by YUEQING SANFENG TRANSMISSION WZL spherical hinged reel coupling




weihua




480/80t


400/100ton


63/10t


卫华起重

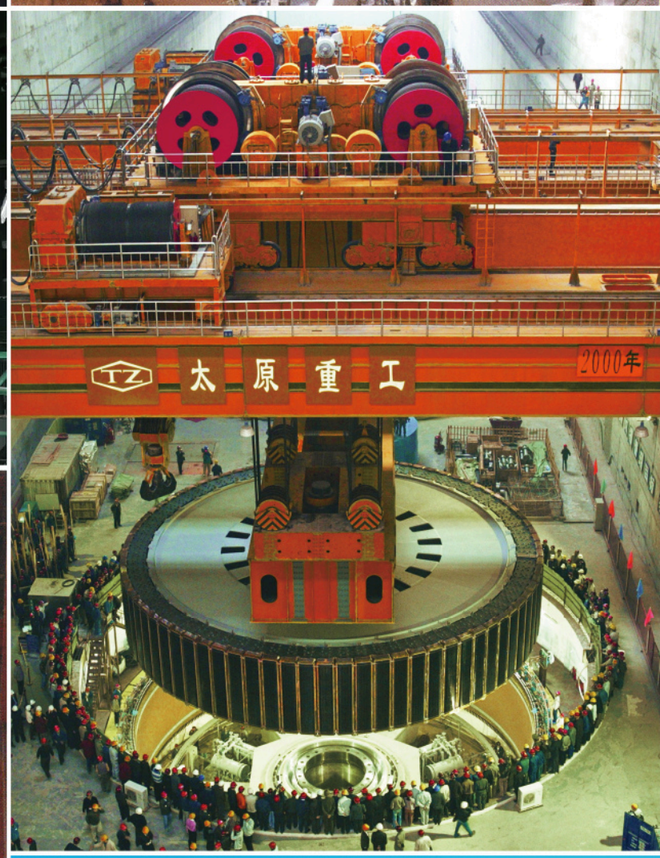
太 原 重 工
2000年


2014年
太原重工
No 2
520/100t


2014年
520/100t

